domix M2

PINOUT

Domotic Module for smart home & co

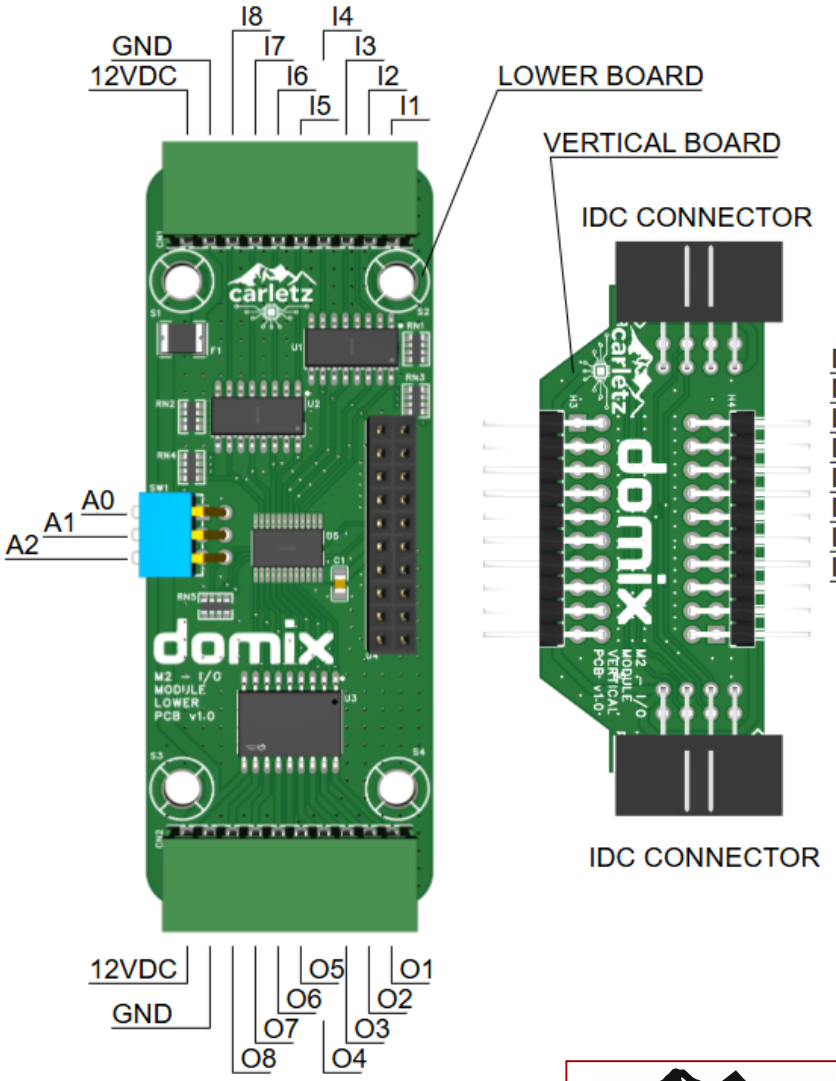

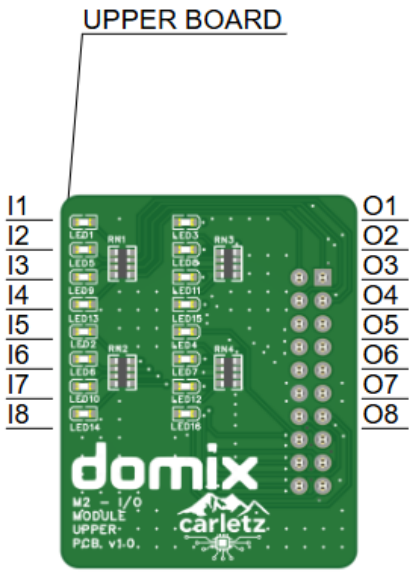

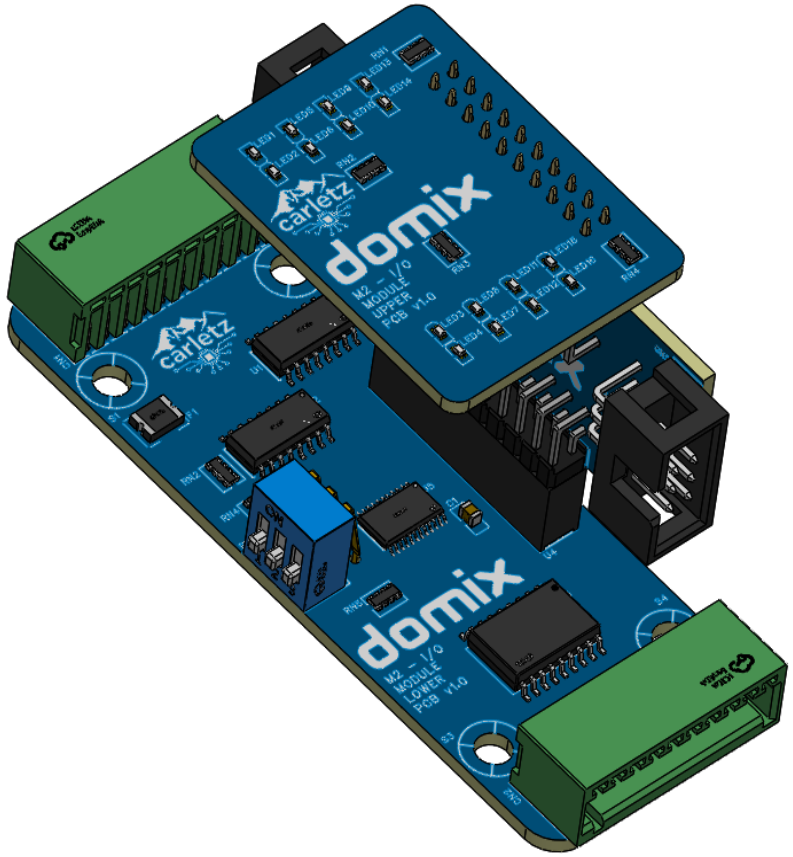

carletz	DOMIX - Domotic module for smart home & co		Create at	2026-01-29	Drawn	carletz
			Update at	2026-02-08	Reviewed	carletz
	Version	Size	Page 1 Total 2	Schematic	M2 - I/O Module		
	1	A4	EasyEDA	Board	M2 - I/O	Page	Description

I/O Logic

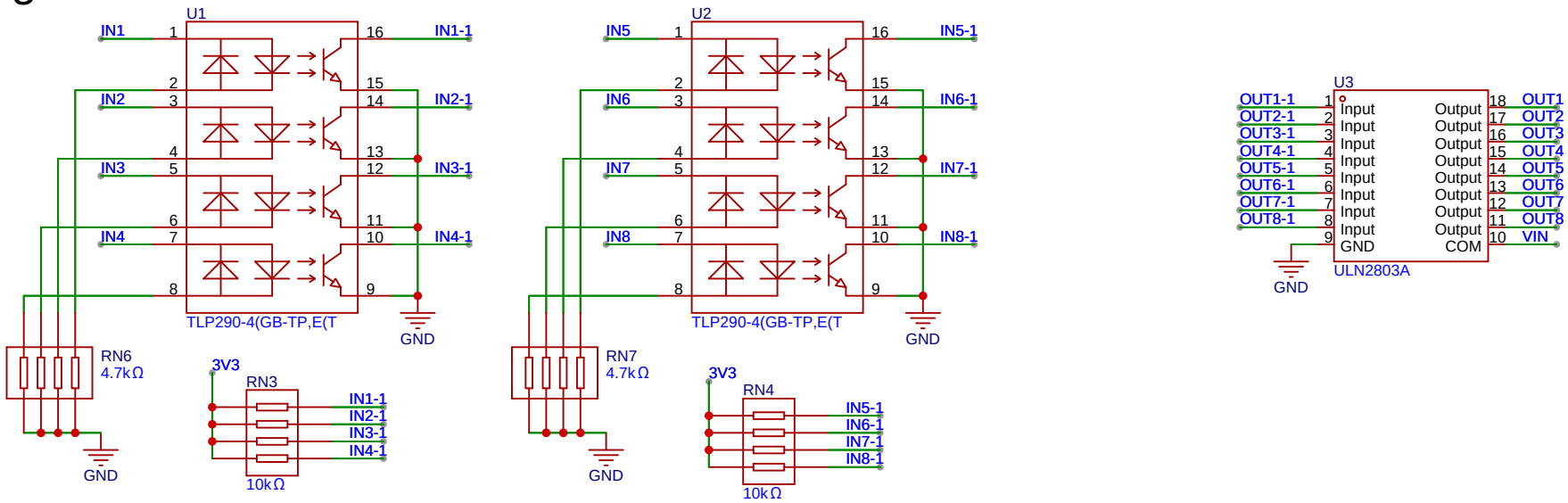

I2C Controller

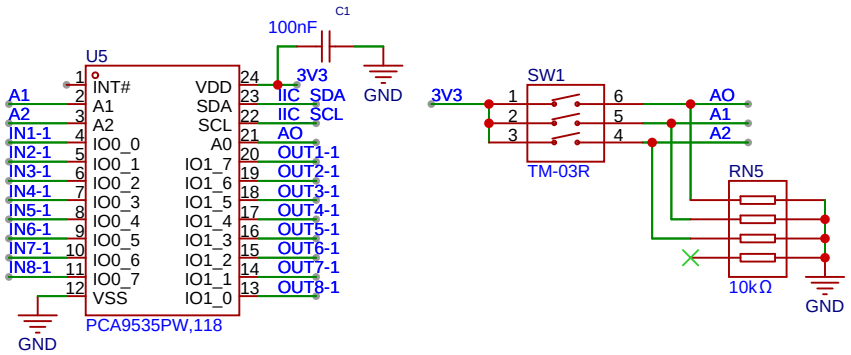

Connector & Miscellanea

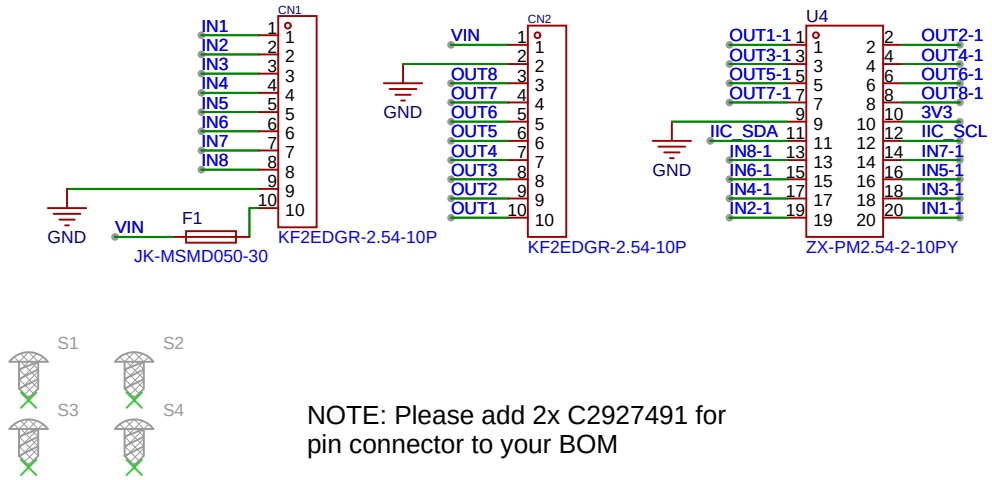

NOTE: Please add 2x C2927491 for pin connector to your BOM

carletz	DOMIX - Domotic module for smart home & co		Create at	2026-01-29	Drawn	carletz
			Update at	2026-02-09	Reviewed	carletz
	Version	Size	Page 2 Total 2	Schematic	M2 - I/O Module		
	1	A4	EasyEDA	Board	M2 - I/O	Page	I/O